9.3.6.4 Pressure Loss Coefficients

The ratio of total pressure loss to velocity pressure loss at a referenced cross-section is

$$C = \frac{\Delta p_t}{\rho\left(\frac{V}{1,097}\right)^2} = \frac{\Delta p_t}{p_v}$$

where

C = local loss coefficient (dimensionless)

Δp_t = total pressure loss (inches of water)

ρ = density $\left(\frac{\text{lbm}}{\text{ft}^3}\right)$

V = velocity (fpm)

p_v = velocity pressure (inches of water)

For all fittings except junctions, the total pressure loss is calculated from

$$\Delta p_t = C_0 p_{v,o}$$

where

Δp_t = total pressure loss of fitting (inches of water)

C_0 = local loss coefficient of fitting (dimensionless)

$p_{v,o}$ = velocity pressure at section o of fitting (inches of water)

©2025 NCEES

9.3.6.5 Duct Pressure Losses

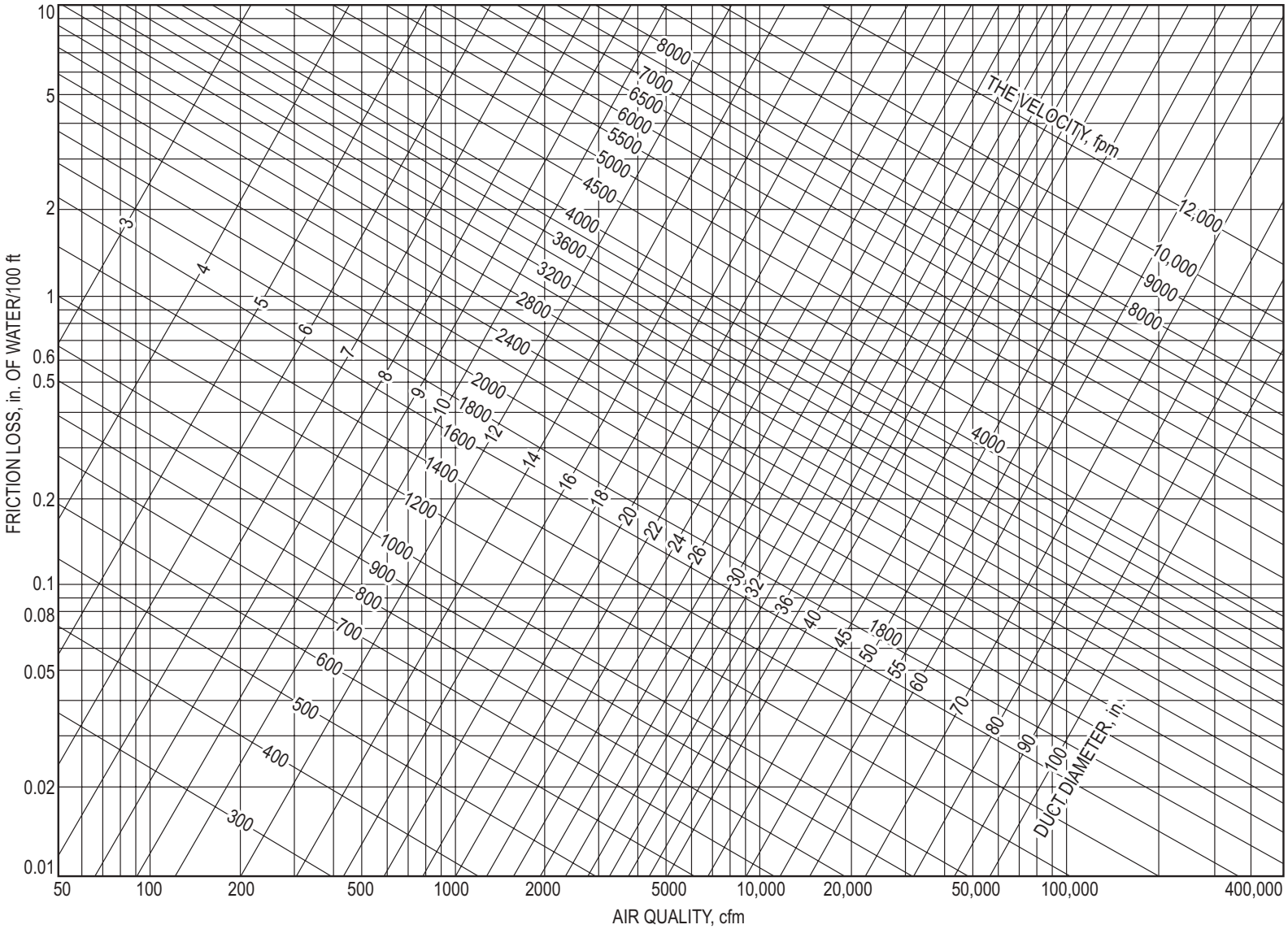

Fig. 9 FRICTION CHART FOR ROUND DUCT (ρ = 0.075 lb_m/ft^3 and ε = 0.0003 ft)

Source: ©ASHRAE, www.ashrae.org., *2009 ASHRAE Handbook—Fundamentals*, Chapter 21, Duct Design, Fig. 9.

Circular Duct Diameter, in.	Length of One Side of Rectangular Duct *a*, in.																
	4	5	6	7	8	9	10	12	14	16	18	20	22	24	26	28	30
	Length Adjacent Side of Rectangular Duct *b*, in.																
5	5																
5.5	6	5															
6	8	6															
6.5	9	7	6														
7	11	8	7														
7.5	13	10	8	7													
8	15	11	9	8													
8.5	17	13	10	9													
9	20	15	12	10	8												
9.5	22	17	13	11	9												
10	25	19	15	12	10	9											
10.5	29	21	16	14	12	10											
11	32	23	18	15	13	11	10										
11.5		26	20	17	14	12	11										
12		29	22	18	15	13	12										
12.5		32	24	20	17	15	13										
13		35	27	22	18	16	14	12									
13.5		38	29	24	20	17	15	13									
14			32	26	22	19	17	14									
14.5			35	28	24	20	18	15									
15			38	30	25	22	19	16	14								
16			45	36	30	25	22	18	15								
17				41	34	29	25	20	17	16							
18				47	39	33	29	23	19	17							
19				54	44	38	33	26	22	19	18						
20					50	43	37	29	24	21	19						
21					57	48	41	33	27	23	20						
22					64	54	46	36	30	26	23	20					
23						60	51	40	33	28	25	22					
24						66	57	44	36	31	27	24	22				
25							63	49	40	34	29	26	24				
26							69	54	44	37	32	28	26	24			
27							76	59	48	40	35	31	28	25			
28								64	52	43	38	33	30	27	26		
29								70	56	47	41	36	32	29	27		
30								76	61	51	44	39	35	31	29	28	
31								82	66	55	47	41	37	34	31	29	
32								89	71	59	51	44	40	36	33	31	
33								96	76	64	54	48	42	38	35	33	30

Source: ©ASHRAE, www.ashrae.org., *2009 ASHRAE Handbook—Fundamentals*, Chapter 21, Duct Design, Table 2.

©2025 NCEES

Round Fittings

CD3-1 Elbow, Die Stamped, 90 Degree, *r/D* = 1.5

D, in.	3	4	5	6	7	8	9	10
C_o	0.30	0.21	0.16	0.14	0.12	0.11	0.11	0.11

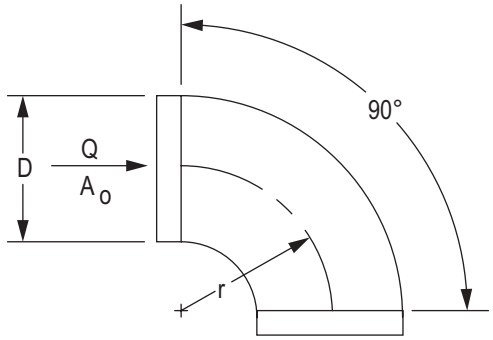

CD3-3 Elbow, Die Stamped, 45 Degree, *r/D* = 1.5

D, in.	3	4	5	6	7	8	9	10
C_o	0.18	0.13	0.10	0.08	0.07	0.07	0.07	0.07

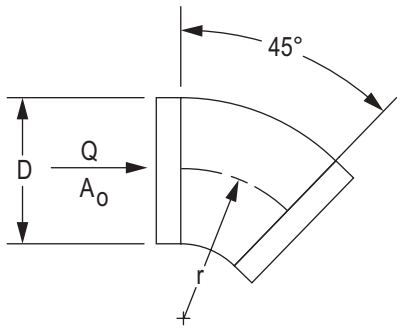

CD3-12 Elbow, 3 Gore, 90 Degree, *r/D* = 0.75 to 2.0

r/D	0.75	1.00	1.50	2.00
C_o	0.54	0.42	0.34	0.33

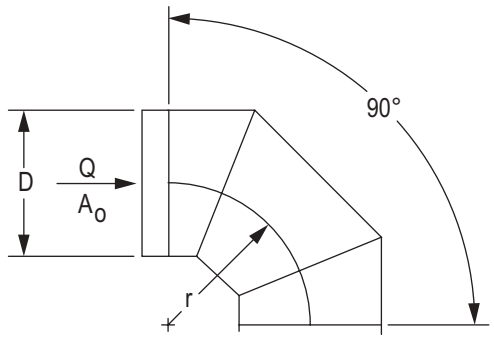

CD3-13 Elbow, 3 Gore, 60 Degree, *r/D* = 1.5

D, in.	3	6	9	12	15	18	21	24	27	30	60
C_o	0.40	0.21	0.16	0.14	0.12	0.12	0.11	0.10	0.09	0.09	0.09

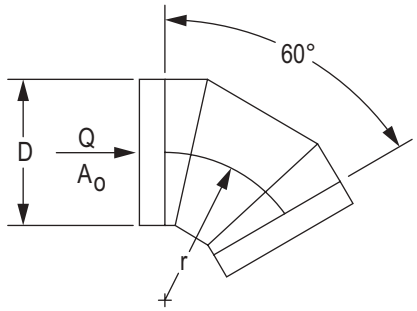

Source: ©ASHRAE, www.ashrae.org., *2009 ASHRAE Handbook—Fundamentals*, Chapter 21, Duct Design, Round Fittings, pp. 21.26 and 21.27.

CD3-14 Elbow, 3 Gore, 45 Degree, *r/D* = 1.5

D, in.	3	6	9	12	15	18	21	24	27	30	60
C_o	0.31	0.17	0.13	0.11	0.11	0.09	0.08	0.08	0.07	0.07	0.07

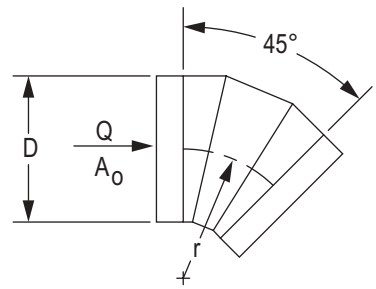

CD3-17 Elbow, Mitered, 45 Degree

D, in.	3	6	9	12	15	18	21	24	27	60
C_o	0.87	0.79	0.74	0.72	0.71	0.70	0.69	0.68	0.68	0.67

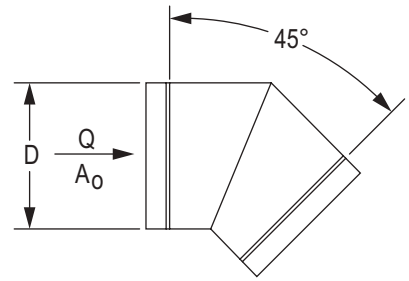

CD9-1 Damper, Butterfly

θ	0	10	20	30	40	50	60	70	75	90
C_o	0.60	0.85	1.70	4.0	9.4	24	67	215	400	9999

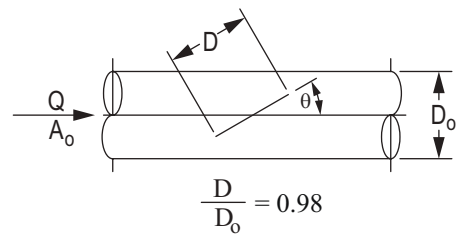

Source: ©ASHRAE, www.ashrae.org., *2009 ASHRAE Handbook—Fundamentals*, Chapter 21, Duct Design, Round Fittings, pp. 21.27 and 21.28.

SD4-1 Transition, Round to Round, Supply Air Systems

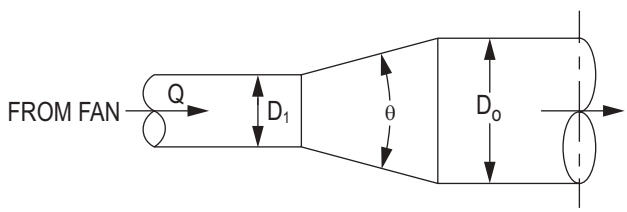

C_o Values								
	θ							
A_o/A_1	0	3	5	10	15	20	30	45
0.10	0.0	0.12	0.09	0.05	0.05	0.05	0.05	0.06
0.167	0.0	0.11	0.08	0.05	0.04	0.04	0.04	0.06
0.25	0.0	0.10	0.07	0.05	0.04	0.04	0.04	0.06
0.39	0.0	0.10	0.07	0.05	0.05	0.05	0.05	0.06
0.50	0.0	0.07	0.06	0.05	0.05	0.05	0.05	0.06
0.64	0.0	0.07	0.07	0.05	0.04	0.04	0.04	0.05
1.0	0.0	0.00	0.00	0.00	0.00	0.00	0.00	0.00
2.0	0.0	0.59	0.51	0.43	0.52	0.76	1.26	1.32
4.0	0.0	3.15	2.78	2.51	3.38	4.77	7.38	9.70

Source: ©ASHRAE, www.ashrae.org., *2009 ASHRAE Handbook—Fundamentals*, Chapter 21, Duct Design, Round Fittings, p. 21.48.

SD4-2 Transition, Rectangular to Round, Supply Air Systems

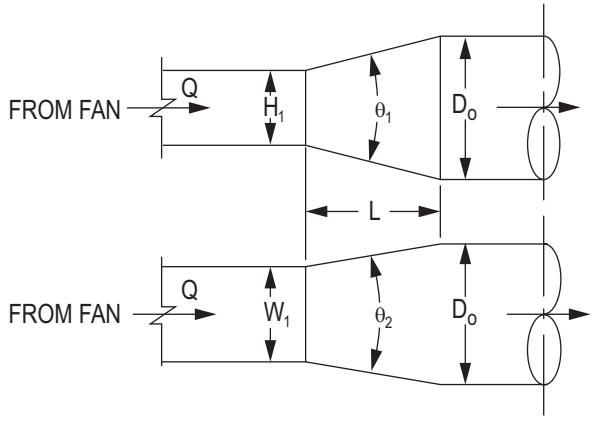

C_o Values

	θ							
A_o/A_1	0	3	5	10	15	20	30	45
0.10	0.0	0.12	0.09	0.05	0.05	0.05	0.05	0.06
0.167	0.0	0.11	0.08	0.05	0.05	0.05	0.05	0.06
0.25	0.0	0.10	0.07	0.05	0.05	0.05	0.05	0.06
0.50	0.0	0.08	0.07	0.06	0.07	0.06	0.05	0.06
1.0	0.0	0.00	0.00	0.00	0.00	0.00	0.00	0.00
2.0	0.0	0.57	0.55	0.61	0.87	1.00	1.20	1.30
4.0	0.0	2.60	2.84	3.92	5.72	7.20	8.32	9.28

SD5-9 Tee, Diverging

C_b Values

	Q_b/Q_c				
A_b/A_c	0.1	0.2	0.3	0.4	0.5
0.1	1.20	0.62	0.80	1.28	1.99
0.2	4.10	1.20	0.72	0.62	0.66
0.3	8.99	2.40	1.20	0.81	0.66
0.4	15.89	4.10	1.94	1.20	0.88
0.5	24.80	6.29	2.91	1.74	1.20
0.6	35.73	8.99	4.10	2.40	1.62
0.7	48.67	12.19	5.51	3.19	2.12
0.8	63.63	15.89	7.14	4.10	2.70

C_s Values

	Q_s/Q_c				
A_s/A_c	0.1	0.2	0.3	0.4	0.5
0.1	0.13	0.24	0.57	0.74	0.74
0.2	0.20	0.13	0.15	0.16	0.28
0.3	0.90	0.14	0.13	0.14	0.15
0.4	2.88	0.20	0.14	0.13	0.14
0.5	6.25	0.38	0.17	0.14	0.13
0.6	11.88	0.90	0.20	0.14	0.14
0.7	18.62	1.72	0.33	0.18	0.16
0.8	26.88	2.88	0.50	0.20	0.15

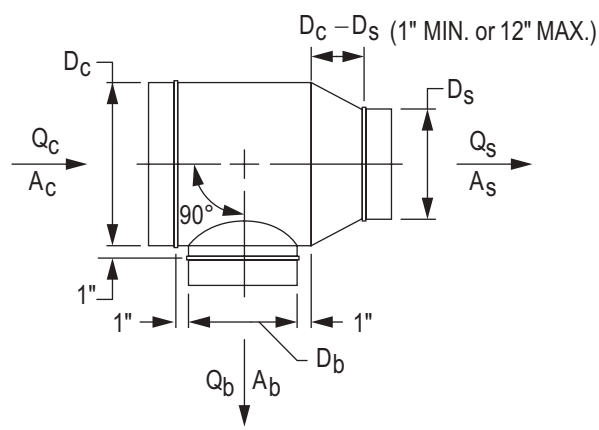

Source: ©ASHRAE, www.ashrae.org., *2009 ASHRAE Handbook—Fundamentals*, Chapter 21, Duct Design, Round Fittings, pp. 21.48 and 21.49.

Rectangular Fittings

CR3-1 Elbow, Smooth Radius, Without Vanes

	C_p Values										
	H/W										
r/W	**0.25**	**0.50**	**0.75**	**1.0**	**1.50**	**2.0**	**3.0**	**4.0**	**5.0**	**6.0**	**8.0**
0.50	1.53	1.38	1.29	1.18	1.06	1.00	1.00	1.06	1.12	1.16	1.18
0.75	0.57	0.52	0.48	0.44	0.40	0.39	0.39	0.40	0.42	0.43	0.44
1.00	0.27	0.25	0.23	0.21	0.19	0.18	0.18	0.19	0.20	0.21	0.21
1.50	0.22	0.20	0.19	0.17	0.15	0.14	0.14	0.15	0.16	0.17	0.17
2.00	0.20	0.18	0.16	0.15	0.14	0.13	0.13	0.14	0.14	0.15	0.15

	Angle Factor *K*										
θ	**0**	**20**	**30**	**45**	**60**	**75**	**90**	**110**	**130**	**150**	**180**
K	0.00	0.31	0.45	0.60	0.78	0.90	1.00	1.13	1.20	1.28	1.40

$C_o = KC_p$ where K = angle factor

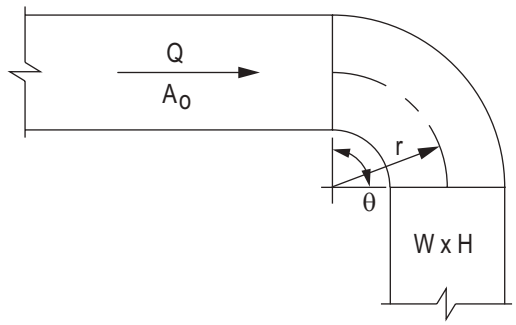

CR3-3 Elbow, Smooth Radius, One Splitter Vane

	C_p Values						
	H/W						
r/W	**0.25**	**0.50**	**1.0**	**1.50**	**2.0**	**3.0**	**4.0**
0.55	0.52	0.40	0.43	0.49	0.55	0.66	0.75
0.60	0.36	0.27	0.25	0.28	0.30	0.35	0.39
0.65	0.28	0.21	0.18	0.19	0.20	0.22	0.25
0.70	0.22	0.16	0.14	0.14	0.15	0.16	0.17
0.75	0.18	0.13	0.11	0.11	0.11	0.12	0.13
0.80	0.15	0.11	0.09	0.09	0.09	0.09	0.10
0.85	0.13	0.09	0.08	0.07	0.07	0.08	0.08
0.90	0.11	0.08	0.07	0.06	0.06	0.06	0.06
0.95	0.10	0.07	0.06	0.05	0.05	0.05	0.05
1.00	0.09	0.06	0.05	0.05	0.04	0.04	0.04

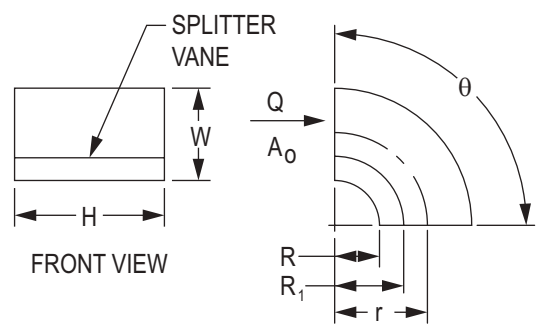

$C_o = KC_p$
$R_1 = R/CR$
where
R = THROAT RADIUS
R_1 = SPLITTER VANE RADIUS
CR = CURVE RATIO
K = ANGLE FACTOR

	Angle Factor *K*				
θ	**0**	**30**	**45**	**60**	**90**
K	0.00	0.45	0.60	0.78	1.00

	Curve Ratio CR									
r/W	**0.55**	**0.60**	**0.65**	**0.70**	**0.75**	**0.80**	**0.85**	**0.90**	**0.95**	**1.0**
CR	0.218	0.302	0.361	0.408	0.447	0.480	0.509	0.535	0.557	0.577

	Throat Radius/Width Ratio (*R/W*)									
r/W	**0.55**	**0.60**	**0.65**	**0.70**	**0.75**	**0.80**	**0.85**	**0.90**	**0.95**	**1.0**
R/W	0.05	0.10	0.15	0.20	0.25	0.30	0.35	0.40	0.45	0.50

Source: ©ASHRAE, www.ashrae.org., *2009 ASHRAE Handbook—Fundamentals*, Chapter 21, Duct Design, Rectangular Fittings, pp. 21.52 and 21.53.

©2025 NCEES

CR3-6 Elbow, Mitered

	C_o Values										
	H/W										
θ	**0.25**	**0.50**	**0.75**	**1.00**	**1.50**	**2.0**	**3.0**	**4.0**	**5.0**	**6.0**	**8.0**
20	0.08	0.08	0.08	0.07	0.07	0.07	0.06	0.06	0.05	0.05	0.05
30	0.18	0.17	0.17	0.16	0.15	0.15	0.13	0.13	0.12	0.12	0.11
45	0.38	0.37	0.36	0.34	0.33	0.31	0.28	0.27	0.26	0.25	0.24
60	0.60	0.59	0.57	0.55	0.52	0.49	0.46	0.43	0.41	0.39	0.38
75	0.89	0.87	0.84	0.81	0.77	0.73	0.67	0.63	0.61	0.58	0.57
90	1.30	1.27	1.23	1.18	1.13	1.07	0.98	0.92	0.89	0.85	0.83

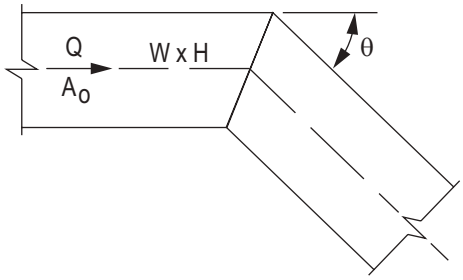

CR3-9 Elbow, Mitered, 90 Degree, Single-Thickness Vanes (1.5 in. Vane Spacing)

$C_o = 0.11$

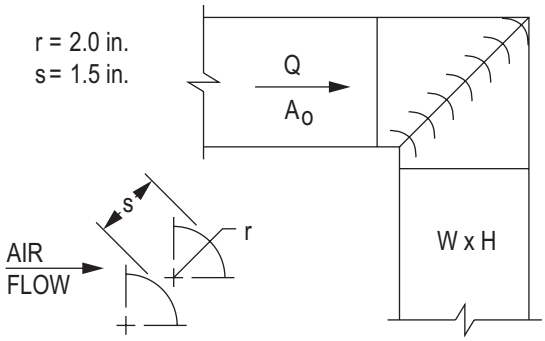

CR3-12 Elbow, Mitered, 90 Degree, Single-Thickness Vanes (3.25 in. Vane Spacing)

$C_O = 0.33$

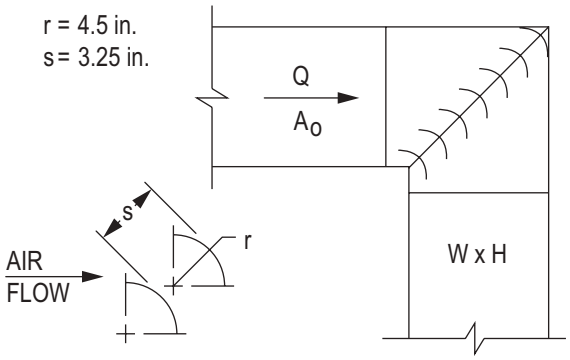

CR3-16 Elbow, Mitered, 90 Degree, Double-Thickness Vanes (3.25 in. Vane Spacing)

$C_O = 0.41$

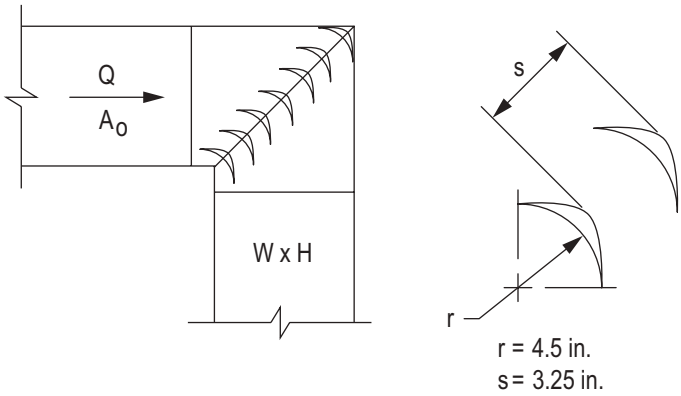

Source: ©ASHRAE, www.ashrae.org., *2009 ASHRAE Handbook—Fundamentals*, Chapter 21, Duct Design, Rectangular Fittings, pp. 21.53 and 21.54.

ER4-1 Transition, Rectangular, Two Sides Parallel, Symmetrical, Exhaust/Return Systems

	C_o Values							
	θ							
A_o/A_1	0	3	5	10	15	20	30	45
0.063	0.0	0.44	0.27	0.25	0.27	0.36	0.56	0.71
0.10	0.0	0.41	0.27	0.23	0.25	0.34	0.53	0.69
0.167	0.0	0.34	0.28	0.21	0.23	0.30	0.48	0.65
0.25	0.0	0.26	0.29	0.17	0.19	0.25	0.42	0.60
0.50	0.0	0.16	0.24	0.14	0.13	0.15	0.24	0.35
1.00	0.0	0.00	0.00	0.00	0.00	0.00	0.00	0.00
2.00	0.0	0.30	0.38	0.25	0.17	0.17	0.17	0.23
4.00	0.0	1.66	1.25	0.77	0.70	0.70	0.70	0.90

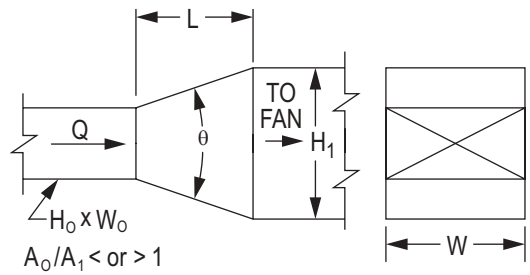

ER4-3 Transition, Rectangular to Round, Exhaust/Return Systems

	C_o Values							
	θ							
A_o/A_1	0	3	5	10	15	20	30	45
0.063	0.0	0.17	0.19	0.30	0.46	0.53	0.64	0.77
0.10	0.0	0.17	0.19	0.30	0.45	0.53	0.64	0.75
0.167	0.0	0.18	0.19	0.30	0.44	0.53	0.63	0.72
0.25	0.0	0.16	0.18	0.25	0.36	0.45	0.52	0.58
0.50	0.0	0.14	0.14	0.15	0.22	0.25	0.30	0.33
1.00	0.0	0.00	0.00	0.00	0.00	0.00	0.00	0.00
2.00	0.0	0.30	0.27	0.26	0.28	0.25	0.19	0.23
4.00	0.0	1.60	1.14	0.84	0.85	0.86	0.76	0.90

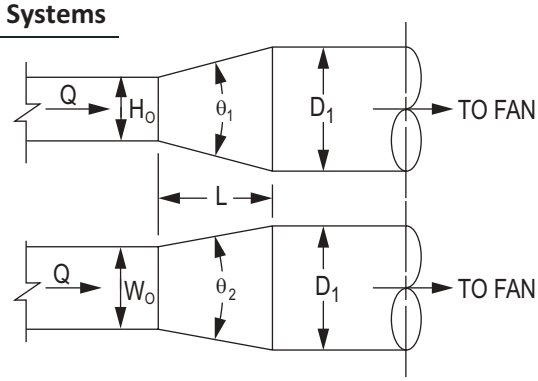

A_O/A_1 < or > 1
θ is larger of θ_1 and θ_2

ER5-2 Tee, Round Tap to Rectangular Main, Converging

Q_b/Q_c	0.1	0.2	0.3	0.4	0.5	0.6	0.7	0.8	0.9	1.0
C_b	–14.00	–2.38	0.50	0.65	1.03	1.17	1.19	1.33	1.51	1.44

Q_s/Q_c	0.1	0.2	0.3	0.4	0.5	0.6	0.7	0.8	0.9	1.0
C_s	22.15	11.91	6.54	3.74	2.23	1.33	0.76	0.38	0.10	0.0

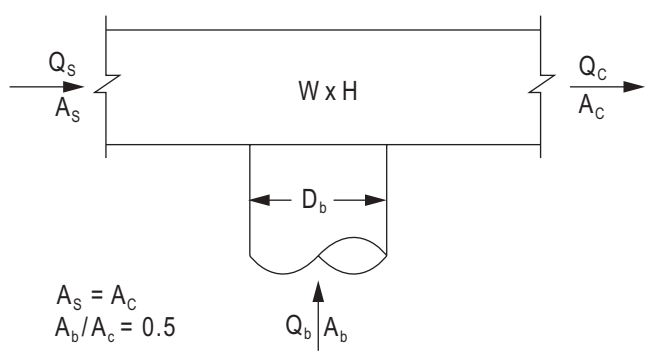

Source: ©ASHRAE, www.ashrae.org., *2009 ASHRAE Handbook—Fundamentals*, Chapter 21, Duct Design, Rectangular Fittings, p. 21.58.

ER5-3 Tee, 45 Degree Entry Branch, Converging

Q_b/Q_c	0.1	0.2	0.3	0.4	0.5	0.6	0.7	0.8	0.9	1.0
C_b	–19.38	–3.75	–0.74	0.48	0.66	0.75	0.85	0.77	0.83	0.83

Q_s/Q_c	0.1	0.2	0.3	0.4	0.5	0.6	0.7	0.8	0.9	1.0
C_s	22.15	11.91	6.54	3.74	2.23	1.33	0.76	0.38	0.10	0.0

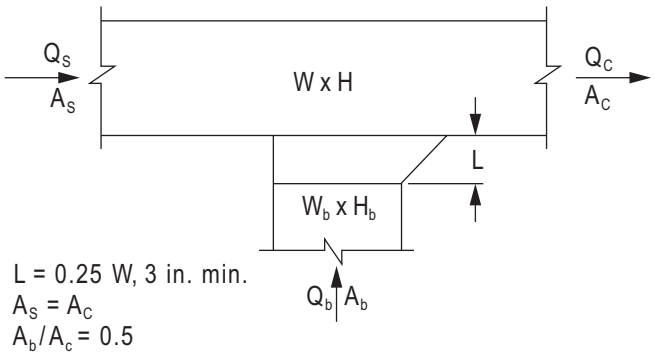

SR4-3 Transition, Round to Rectangular, Supply Air Systems

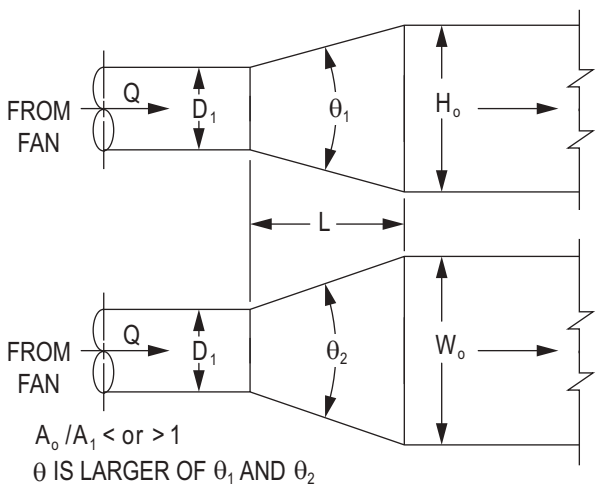

C_o Values								
	θ							
A_o/A_1	0	3	5	10	15	20	30	45
0.10	0.0	0.12	0.09	0.05	0.05	0.05	0.05	0.06
0.167	0.0	0.11	0.08	0.05	0.05	0.05	0.05	0.06
0.25	0.0	0.10	0.07	0.05	0.05	0.05	0.05	0.06
0.50	0.0	0.08	0.07	0.06	0.07	0.06	0.05	0.06
1.00	0.0	0.00	0.00	0.00	0.00	0.00	0.00	0.00
2.00	0.0	0.57	0.55	0.61	0.87	1.00	1.20	1.30
4.00	0.0	2.60	2.84	3.92	5.72	7.20	8.32	9.28

Source: ©ASHRAE, www.ashrae.org., *2009 ASHRAE Handbook—Fundamentals*, Chapter 21, Duct Design, Rectangular Fittings, pp. 21.58 and 21.62.

SR5-1 Smooth Wye of Type $A_s + A_b \geq A_c$, Branch 90° to Main, Diverging

		C_b Values								
		Q_b/Q_c								
A_s/A_c	A_b/A_c	**0.1**	**0.2**	**0.3**	**0.4**	**0.5**	**0.6**	**0.7**	**0.8**	**0.9**
0.50	0.25	2.25	0.48	0.25	0.18	0.17	0.16	0.17	0.17	0.17
	0.50	11.00	2.38	1.06	0.64	0.52	0.47	0.47	0.47	0.48
	1.00	60.00	13.00	4.78	2.06	0.96	0.47	0.31	0.27	0.26
0.75	0.25	2.19	0.55	0.35	0.31	0.33	0.35	0.36	0.37	0.39
	0.50	13.00	2.50	0.89	0.47	0.34	0.31	0.32	0.36	0.43
	1.00	70.00	15.00	5.67	2.63	1.36	0.78	0.53	0.41	0.36
1.00	0.25	3.44	0.78	0.42	0.33	0.30	0.31	0.40	0.42	0.46
	0.50	15.50	3.00	1.11	0.63	0.48	0.42	0.40	0.42	0.46
	1.00	67.00	13.75	5.11	2.31	1.28	0.81	0.59	0.47	0.46

		C_s Values								
		Q_s/Q_c								
A_s/A_c	A_b/A_c	**0.1**	**0.2**	**0.3**	**0.4**	**0.5**	**0.6**	**0.7**	**0.8**	**0.9**
0.50	0.25	8.65	1.12	0.21	0.05	0.06	0.10	0.15	0.19	0.24
	0.50	7.50	0.98	0.19	0.06	0.06	0.10	0.14	0.18	0.22
	1.00	5.21	0.68	0.15	0.06	0.07	0.10	0.13	0.16	0.19
0.75	0.25	19.62	3.25	0.86	0.23	0.05	0.02	0.00	0.00	0.05
	0.50	20.62	3.24	0.76	0.14	–0.03	–0.07	–0.05	–0.01	0.03
	1.00	17.01	2.55	0.55	0.07	–0.05	–0.05	–0.02	0.02	0.06
1.00	0.25	46.00	9.50	3.22	1.31	0.52	0.14	–0.02	–0.05	–0.01
	0.50	35.34	6.49	1.98	0.69	0.22	0.00	–0.04	–0.05	–0.05
	1.00	38.95	7.10	2.15	0.74	0.23	0.03	–0.04	–0.05	–0.04

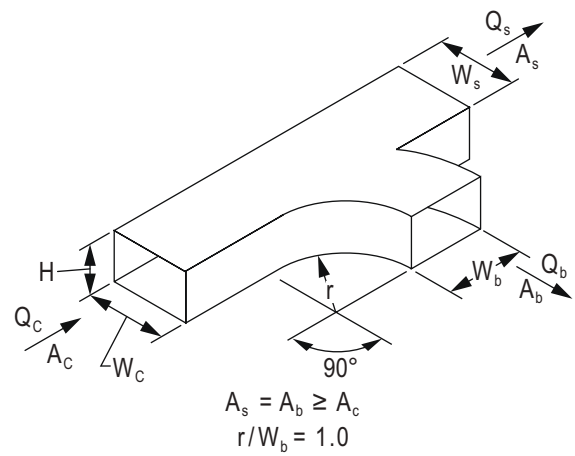

Source: ©ASHRAE, www.ashrae.org., *2009 ASHRAE Handbook—Fundamentals*, Chapter 21, Duct Design, Rectangular Fittings, p. 21.62.

SR5-13 Tee, 45 Degree Entry Branch, Diverging

	C_b Values								
	Q_b/Q_c								
A_b/A_c	0.1	0.2	0.3	0.4	0.5	0.6	0.7	0.8	0.9
0.1	0.32	0.33	0.32	0.34	0.32	0.37	0.38	0.39	0.40
0.2	0.31	0.32	0.41	0.34	0.32	0.32	0.33	0.34	0.35
0.3	1.86	1.65	0.73	0.47	0.37	0.34	0.32	0.32	0.32
0.4	3.56	3.10	1.28	0.73	0.51	0.41	0.36	0.34	0.32
0.5	5.74	4.93	2.07	1.12	0.73	0.54	0.44	0.38	0.35
0.6	8.48	7.24	3.10	1.65	1.03	0.73	0.56	0.47	0.41
0.7	11.75	10.00	4.32	3.31	1.42	0.98	0.73	0.58	0.49
0.8	15.57	13.22	5.74	3.10	1.90	1.28	0.94	0.73	0.60
0.9	19.92	16.90	7.38	4.02	2.46	1.65	1.19	0.91	0.73

	C_s Values								
	Q_s/Q_c								
A_s/A_c	0.1	0.2	0.3	0.4	0.5	0.6	0.7	0.8	0.9
0.1	0.04	0.01	0.00	0.00	0.00	0.00	0.00	0.00	0.00
0.2	0.98	0.04	0.01	0.00	0.00	0.00	0.00	0.00	0.00
0.3	3.48	0.31	0.04	0.01	0.00	0.00	0.00	0.00	0.00
0.4	7.55	0.98	0.18	0.04	0.02	0.00	0.00	0.00	0.00
0.5	13.18	2.03	0.49	0.13	0.04	0.00	0.01	0.00	0.00
0.6	20.38	3.48	0.98	0.31	0.10	0.04	0.02	0.01	0.00
0.7	29.15	5.32	1.64	0.60	0.23	0.09	0.04	0.02	0.01
0.8	39.48	7.55	2.47	0.98	0.42	0.18	0.08	0.04	0.02
0.9	51.37	10.17	3.48	1.46	0.67	0.31	0.15	0.07	0.04

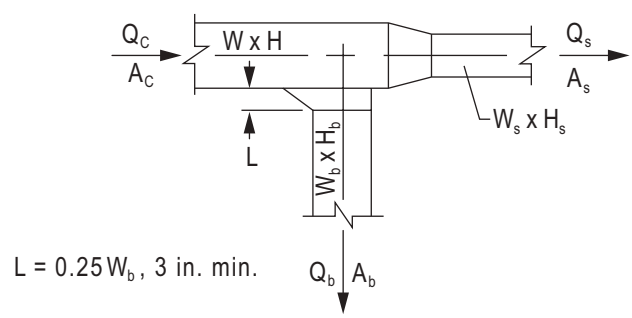

Source: ©ASHRAE, www.ashrae.org., *2009 ASHRAE Handbook—Fundamentals*, Chapter 21, Duct Design, Rectangular Fittings, p. 21.64.

SR7-1 Fan, Centrifugal, Without Outlet Diffuser, Free Discharge

A_b/A_o	0.4	0.5	0.6	0.7	0.8	0.9	1.0
C_o	2.00	2.00	1.00	0.80	0.47	0.22	0.00

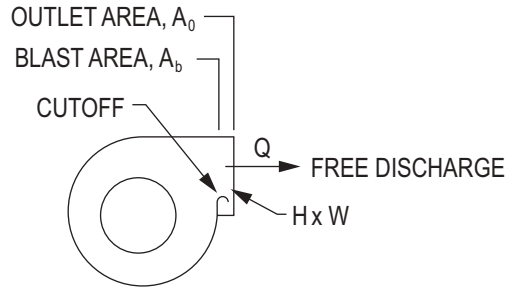

SR7-2 Plane Asymmetric Diffuser at Centrifugal Fan Outlet, Free Discharge

	C_o Values					
	A_1/A_o					
θ	1.5	2.0	2.5	3.0	3.5	4.0
10	0.51	0.34	0.25	0.21	0.18	0.17
15	0.54	0.36	0.27	0.24	0.22	0.20
20	0.55	0.38	0.31	0.27	0.25	0.24
25	0.59	0.43	0.37	0.35	0.33	0.33
30	0.63	0.50	0.46	0.44	0.43	0.42
35	0.65	0.56	0.53	0.52	0.51	0.50

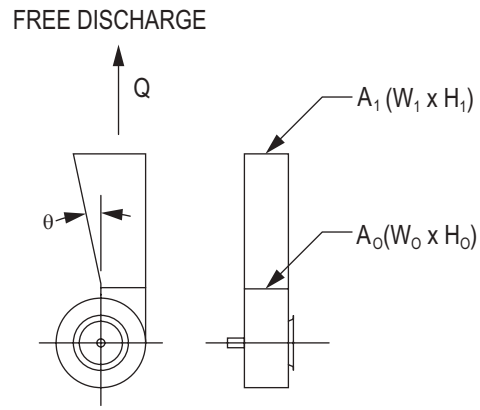

SR7-5 Fan Outlet, Centrifugal, SWSI, with Elbow (Position A)

	C_o Values					
	L/L_e					
A_b/A_o	0.00	0.12	0.25	0.50	1.0	10.0
0.4	3.20	2.50	1.80	0.80	0.0	0.0
0.5	2.20	1.80	1.20	0.53	0.0	0.0
0.6	1.60	1.40	0.80	0.40	0.0	0.0
0.7	1.00	0.80	0.53	0.26	0.0	0.0
0.8	0.80	0.67	0.47	0.18	0.0	0.0
0.9	0.53	0.47	0.33	0.18	0.0	0.0
1.0	0.53	0.47	0.33	0.18	0.0	0.0

$$V_o > 2{,}500 \text{ fpm:} \quad L_e = \frac{V_o\sqrt{A_o}}{10{,}600}$$

$$V_o \le 2{,}500 \text{ fpm:} \quad L_e = \frac{\sqrt{A_o}}{4.3}$$

where

V_o = duct velocity, fpm

L_e = effective duct lenght, ft

A_o = duct area, in.^{2}

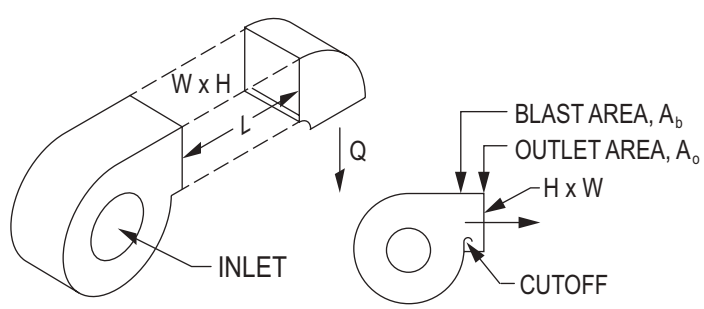

SWSI CENTRIFUGAL FAN

Source: ©ASHRAE, www.ashrae.org., *2009 ASHRAE Handbook—Fundamentals*, Chapter 21, Duct Design, Rectangular Fittings, pp. 21.64 and 21.65.

SR7-6 Fan Outlet, Centrifugal, SWSI, with Elbow (Position B)

	C_o Values					
	L/L_e					
A_b/A_o	0.00	0.12	0.25	0.50	1.0	10.0
0.4	3.80	3.20	2.20	1.00	0.0	0.0
0.5	2.90	2.20	1.60	0.67	0.0	0.0
0.6	2.00	1.60	1.20	0.53	0.0	0.0
0.7	1.40	1.00	0.67	0.33	0.0	0.0
0.8	1.00	0.80	0.53	0.26	0.0	0.0
0.9	0.80	0.67	0.47	0.18	0.0	0.0
1.0	0.67	0.53	0.40	0.18	0.0	0.0

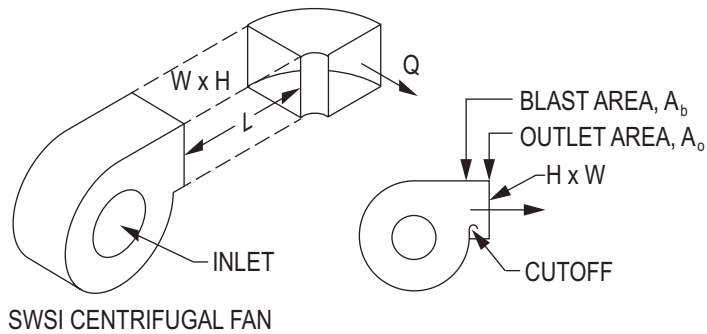

To calculate L_e, see Fitting SR7-5.

SR7-7 Fan Outlet, Centrifugal, SWSI, with Elbow (Position C)

	C_o Values					
	L/L_e					
A_b/A_o	0.00	0.12	0.25	0.50	1.0	10.0
0.4	5.50	4.50	3.20	1.60	0.0	0.0
0.5	3.80	3.20	2.20	1.00	0.0	0.0
0.6	2.90	2.50	1.60	0.80	0.0	0.0
0.7	2.00	1.60	1.00	0.53	0.0	0.0
0.8	1.40	1.20	0.80	0.33	0.0	0.0
0.9	1.20	0.80	0.67	0.26	0.0	0.0
1.0	1.00	0.80	0.53	0.26	0.0	0.0

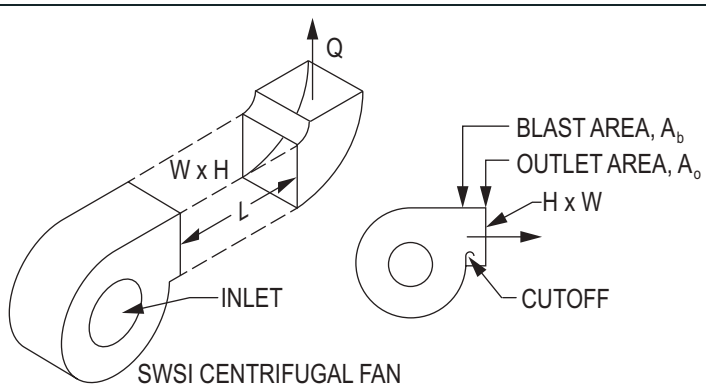

To calculate L_e, see Fitting SR7-5.

Source: ©ASHRAE, www.ashrae.org., *2009 ASHRAE Handbook—Fundamentals*, Chapter 21, Duct Design, Rectangular Fittings, p. 21.65 and 21.66.

©2025 NCEES

SR7-8 Fan Outlet, Centrifugal, SWSI, with Elbow (Position D)

	C_o Values					
	L/L_e					
A_b/A_o	0.00	0.12	0.25	0.50	1.0	10.0
0.4	5.50	4.50	3.20	1.60	0.0	0.0
0.5	3.80	3.20	2.20	1.00	0.0	0.0
0.6	2.90	2.50	1.60	0.80	0.0	0.0
0.7	2.00	1.60	1.00	0.53	0.0	0.0
0.8	1.40	1.20	0.80	0.33	0.0	0.0
0.9	1.20	0.80	0.67	0.26	0.0	0.0
1.0	1.00	0.80	0.53	0.26	0.0	0.0

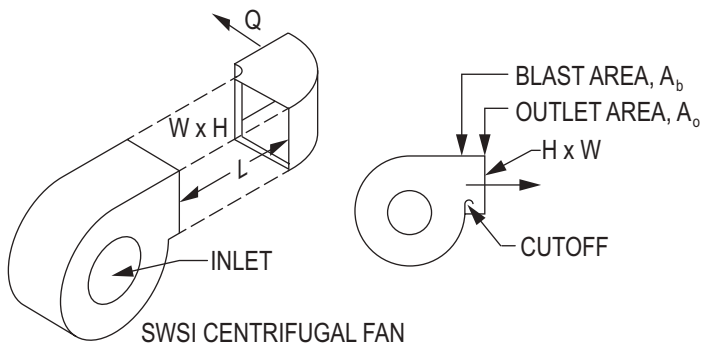

To calculate L_e, see Fitting SR7-5.

SR7-9 Fan Outlet, Centrifugal, DWDI, with Elbow (Position A)

	C_o Values					
	L/L_e					
A_b/A_o	0.00	0.12	0.25	0.50	1.0	10.0
0.4	3.20	2.50	1.80	0.80	0.0	0.0
0.5	2.20	1.80	1.20	0.53	0.0	0.0
0.6	1.60	1.40	0.80	0.40	0.0	0.0
0.7	1.00	0.80	0.53	0.26	0.0	0.0
0.8	0.80	0.67	0.47	0.18	0.0	0.0
0.9	0.53	0.47	0.33	0.18	0.0	0.0
1.0	0.53	0.47	0.33	0.18	0.0	0.0

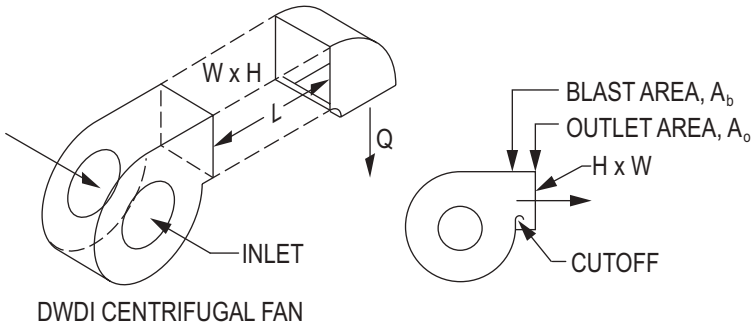

To calculate L_e, see Fitting SR7-5.

Source: ©ASHRAE, www.ashrae.org., *2009 ASHRAE Handbook—Fundamentals*, Chapter 21, Duct Design, Rectangular Fittings, p. 21.66.

©2025 NCEES

SR7-10 Fan Outlet, Centrifugal, DWDI, with Elbow (Position B)

	C_o Values					
	L/L_e					
A_b/A_o	0.00	0.12	0.25	0.50	1.0	10.0
0.4	4.80	4.00	2.90	1.30	0.0	0.0
0.5	3.60	2.90	2.00	0.84	0.0	0.0
0.6	2.50	2.00	1.50	0.66	0.0	0.0
0.7	1.80	1.30	0.84	0.41	0.0	0.0
0.8	1.25	1.00	0.66	0.33	0.0	0.0
0.9	1.00	0.84	0.59	0.23	0.0	0.0
1.0	0.84	0.66	0.50	0.23	0.0	0.0

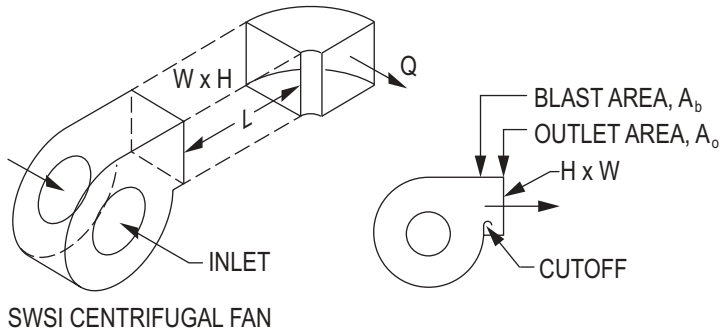

To calculate L_e, see Fitting SR7-5.

SR7-11 Fan Outlet, Centrifugal, DWDI, with Elbow (Position C)

	C_o Values					
	L/L_e					
A_b/A_o	0.00	0.12	0.25	0.50	1.0	10.0
0.4	5.50	4.50	3.20	1.60	0.0	0.0
0.5	3.80	3.20	2.20	1.00	0.0	0.0
0.6	2.90	2.50	1.60	0.80	0.0	0.0
0.7	2.00	1.60	1.00	0.53	0.0	0.0
0.8	1.40	1.20	0.80	0.33	0.0	0.0
0.9	1.20	0.80	0.67	0.26	0.0	0.0
1.0	1.00	0.80	0.53	0.26	0.0	0.0

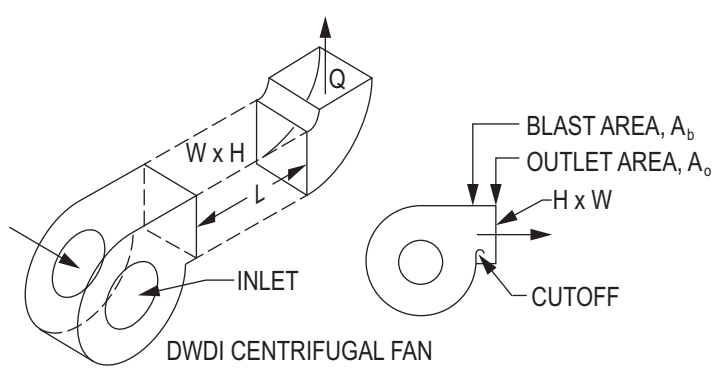

To calculate L_e, see Fitting SR7-5.

Source: ©ASHRAE, www.ashrae.org., *2009 ASHRAE Handbook—Fundamentals*, Chapter 21, Duct Design, Rectangular Fittings, pp. 21.66 and 21.67.

©2025 NCEES

SR7-12 Fan Outlet, Centrifugal, DWDI, with Elbow (Position D)

	C_o Values					
	L/L_e					
A_b/A_o	0.00	0.12	0.25	0.50	1.0	10.0
0.4	4.70	3.80	2.70	1.40	0.0	0.0
0.5	3.20	2.70	1.90	0.85	0.0	0.0
0.6	2.50	2.10	1.40	0.68	0.0	0.0
0.7	1.70	1.40	0.85	0.45	0.0	0.0
0.8	1.20	1.00	0.68	0.26	0.0	0.0
0.9	1.00	0.68	0.57	0.22	0.0	0.0
1.0	0.85	0.68	0.45	0.22	0.0	0.0

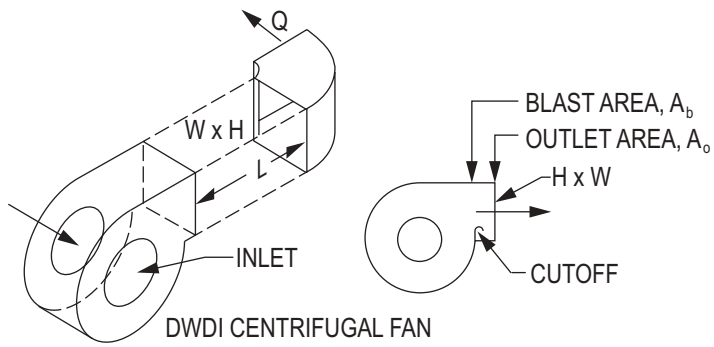

To calculate L_e, see Fitting SR7-5.

SR7-17 Pyramidal Diffuser at Centrifugal Fan Outlet with Ductwork

	C_1 Values						
	A_o/A_1						
θ	1.0	1.5	2.0	2.5	3.0	3.5	4.0
0	0.00	0.00	0.00	0.00	0.00	0.00	0.00
10	0.00	0.10	0.18	0.21	0.23	0.24	0.25
15	0.00	0.23	0.33	0.38	0.40	0.42	0.44
20	0.00	0.31	0.43	0.48	0.53	0.56	0.58
25	0.00	0.36	0.49	0.55	0.58	0.62	0.64
30	0.00	0.42	0.53	0.59	0.64	0.67	0.69

$$C_o = C_1\left(\frac{A_o}{A_1}\right)^2$$

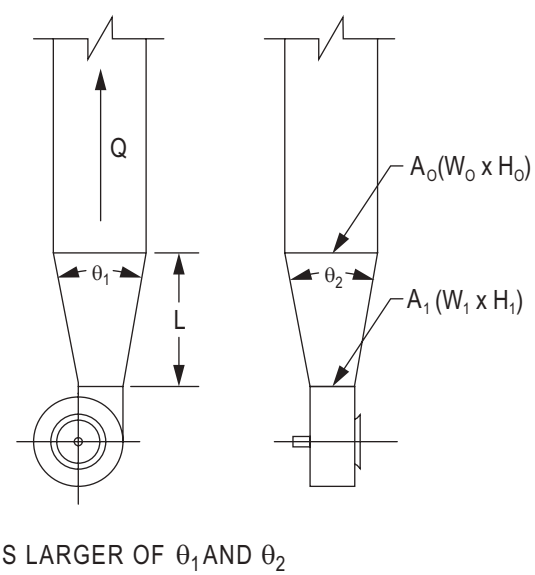

Source: ©ASHRAE, www.ashrae.org., *2009 ASHRAE Handbook—Fundamentals*, Chapter 21, Duct Design, Rectangular Fittings, p. 21.67.

9.3.6.6 Darcy-Weisbach Equation

Total pressure loss in a duct section is calculated by

$$\Delta p_{\mathrm{f}} = \left(\frac{12f\,L}{D_{\mathrm{h}}} + \sum C\right)\rho\left(\frac{V}{1{,}097}\right)^2$$

where $\sum C$ = summation of local loss coefficient on the duct section

Each fitting loss coefficient must be referenced to that section's velocity pressure.

HVAC systems generally follow this law: $\frac{\Delta P_2}{\Delta P_1} = \left(\frac{Q_2}{Q_1}\right)^2$

9.3.6.7 Fan Outlet Conditions

For 100% recovery, the duct length including transition must meet the requirements for 100% effective duct length, calculated as follows:

For $V_{\mathrm{o}} > 2{,}500$ fpm: $L_{\mathrm{e}} = \frac{V_{\mathrm{o}}\sqrt{A_{\mathrm{o}}}}{10{,}600}$

For $V_{\mathrm{o}} < 2{,}500$ fpm: $L_{\mathrm{e}} = \frac{\sqrt{A_{\mathrm{o}}}}{4.3}$

where

V_{o} = duct velocity (fpm)

L_{e} = effective duct length (ft)

A_{o} = duct area (in^2)

©2025 NCEES